MAJOR LEAGUE ELECTRONICS

2mm (.079") c.l. Board Stacker Terminal Strips-Straight

FastBall Delivery 3/5 Days to You!

High Temp

BSTS-2□□-□-□-□□-□□-□□□-□□-□□□

H High Temp.	
Pins per row	01-50
Singles	S
Doubles	D
Tail Length	
A = .090 (2,29)	A
B = .180 (4,57)	B

Lead Style Chart

Length	
(8,20) .323 (Not available with .180 tail)	02
(10,08) .397	04
(10,59) .417	06
(11,58) .456	07
(14,10) .555	08
(14,61) .575	10
(15,09) .594	12
(15,60) .614	14
(16,18) .637	16
(19,10) .752	18
(21,11) .831	20

(Metric Dimensions)

Plating Options	
G = 10μ in gold in contact area, gold flash on tail	G
GT = 10μ in gold in contact area, 200μ in tin/lead on tail	GT
H = 30μ gold on contact area, 200μ in tin/lead on tail	H
T = 200μ in tin/lead over entire pin	T

Other plating options available upon request

Board Space (.120 minimum)

Lock Tight Option LT

Two tails per strip are crimped in opposing directions on or near the centerline. Must have a minimum tail dimension of .090". Recommended hole size of .032".

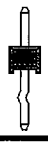

Position for Polarization Option 001-100

Mates with: SSHS, SSHR, SH, BSSH, SSHSM, BSSHC

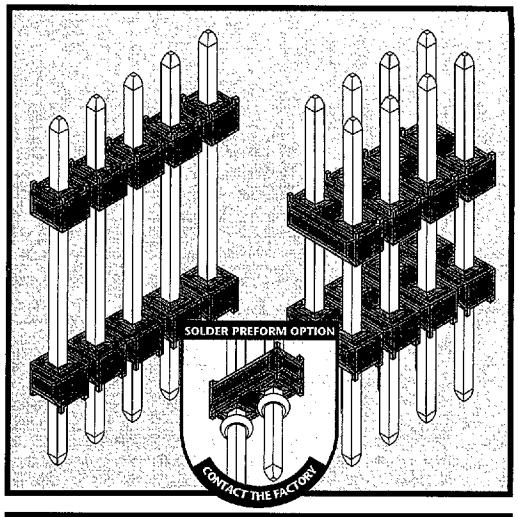

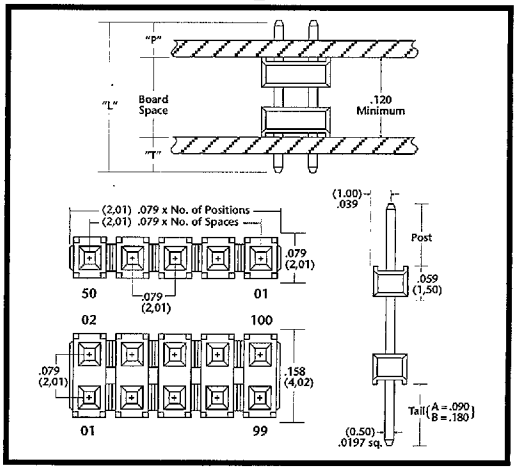

EXAMPLE: You select the "board" spacing that you want, listed below are several examples. **Formula: "L"ength - "T"ail - "B"oard = "P"ost**

STANDARD TEMPERATURE EXAMPLES

Part Number	"L"ength	"T"ail	"B"oard	"P"ost
BSTS-2XX-X-A-02-XX-080	(8,20) .323	(3,30) .130	(2,03) 0.090	(2,61) .103
BSTS-2XX-X-A-02-XX-120	(8,20) .323	(2,29) .090	(3,05) 0.120	(2,87) .113
BSTS-2XX-X-A-02-XX-150	(8,20) .323	(2,29) .090	(3,81) 0.150	(2,11) .083
BSTS-2XX-X-A-04-XX-165	(10,08) .397	(2,29) .090	(4,19) 0.165	(3,60) .142
BSTS-2XX-X-A-04-XX-180	(10,08) .397	(2,29) .090	(4,57) 0.180	(3,22) .127

HIGH TEMPERATURE EXAMPLES

Part Number	"L"ength	"T"ail	"B"oard	"P"ost
HBSTS-2XX-X-B-06-XX-120	(10,59) .417	(4,57) .180	(3,05) .120	(2,97) .117
HBSTS-2XX-X-B-06-XX-150	(10,59) .417	(4,57) .180	(3,81) .150	(2,21) .087
HBSTS-2XX-X-B-08-XX-175	(14,10) .555	(4,57) .180	(4,44) .175	(5,08) .200
HBSTS-2XX-X-B-08-XX-200	(14,10) .555	(4,57) .180	(5,08) .200	(4,44) .175
HBSTS-2XX-X-B-10-XX-225	(14,61) .575	(4,57) .180	(5,71) .225	(4,34) .170

APPLICATION

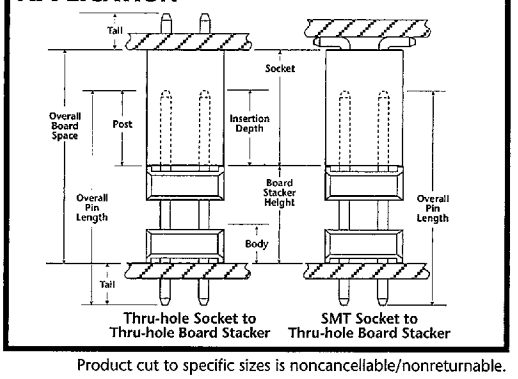

Product cut to specific sizes is noncancellable/nonreturnable.
Parts are subject to change without notice.

Materials & Performance Specifications

	STANDARD	HIGH TEMPERATURE
Insulator	Black, glass filled, polyester	High temperature thermoplastic
Terminal	Phosphor Bronze	Phosphor Bronze
Insulation Resistance	5,000M Ω minimum	5,000M Ω minimum
Flammability	UL 94V-O	UL 94V-O
Temperature Range	-65°C to +125°C	-65°C to +250°C
Current Rating	2 ampere	2 ampere
Plating	All Plating Options over 50μ in Ni	All Plating Options over 50μ in Ni

Delivery On Time. Every Time...Or The Order's Free!

D 24F 9019296 0000044 095

ne: 812-944-7244 • Facsimile: 812-944-7268 • Email: mle@iglou.com